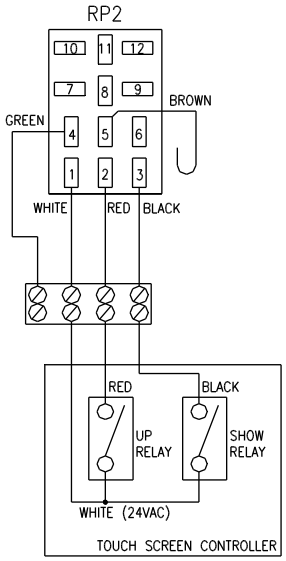

TOUCH SCREEN CONTROLLER TWO RELAY OPTION
TOUCH SCREEN CONTROLLER CONTROLS DOWN TO SHOW POSITION AND UP

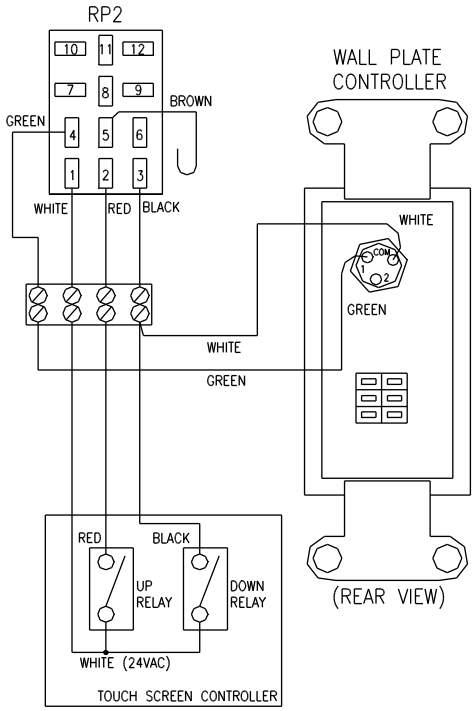

SVS TOUCH SCREEN CONTROLLER OPTION 1
(**REQUIRES REWIRE OF WALL PLATE CONTROLLER**)

WITH WALL PLATE KEY SWITCH IN THE SHOW/OFF POSITION THE TOUCH SCREEN CONTROLLER CONTROLS DOWN TO SHOW POSITION AND UP

WITH WALL PLATE KEY SWITCH IN THE SERVICE POSITION THE TOUCH SCREEN CONTROLLER CONTROLS DOWN TO SERVICE POSITION AND UP

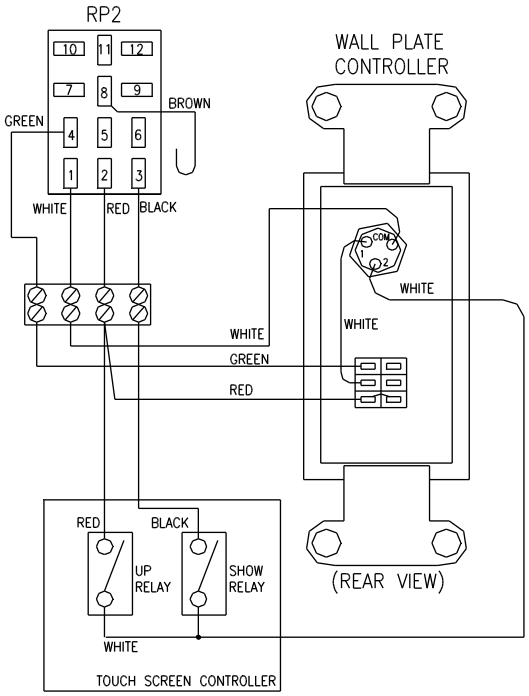

SVS TOUCH SCREEN CONTROLLER OPTION 2
(**REQUIRES REWIRE OF WALL PLATE CONTROLLER**)

WITH WALL PLATE KEY SWITCH IN THE SHOW POSITION THE TOUCH SCREEN CONTROLLER CONTROLS DOWN TO SHOW POSITION AND UP

WITH WALL PLATE KEY SWITCH IN THE SERVICE POSITION THE WALL PLATE CONTROLLER TOGGLE SWITCH CONTROLS DOWN TO SERVICE POSITION AND UP

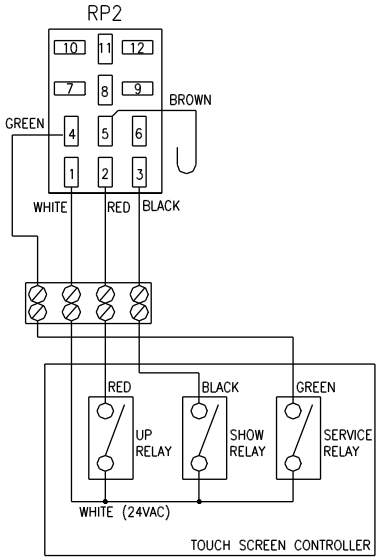

TOUCH SCREEN CONTROLLER THREE RELAY OPTION
TOUCH SCREEN CONTROLLER CONTROLS DOWN TO SHOW POSITION, DOWN TO SERVICE, AND UP

IF YOU HAVE ANY QUESTIONS CONCERNING THIS WIRING PLEASE CONTACT SVS AT 001-303-794-4446 OR TECHSUPPORT@SVSLIFTS.COM

NOTE:
1. PROGRAM A RELEASE OF RELAYS TO STOP UP AND DOWN.
2. PROGRAM A TIME OUT AFTER NORMAL RUN TIME IS EXCEEDED (SVS SCISSORS LIFTS MOVE AT 1-INCH/SECOND).
3. PROGRAM AN EXCLUSIVE LOCKOUT ON UP AND DOWN SO BOTH CAN NOT BE ACTIVATED AT THE SAME TIME. THIS PREVENTS THE LIFT FROM ENTERING A LOCK OUT CONDITION.
4. HOLD RELAYS ON TO MOVE LIFT AND RELEASE TO STOP LIFT.
5. CONNECTING A TOUCH SCREEN CONTROLLER AND THE WALL PLATE CONTROLLER IN PARALLEL WILL CAUSE THE LIFT ENTER A LOCK OUT CONDITION IF THE LIFT RECEIVES 24VAC ON THE UP (RED WIRE) AND DOWN (BLACK WIRE OR GREEN WIRE) AT THE SAME TIME.
6. THIS TOUCH SCREEN WIRING CAN NOT BE USED WITH SVS ACCESSORY #15 12-VOLT TRIGGER.
7. MATCH WIRE COLOR NOT TERMINAL STRIP POSITION. WIRES ARE NOT ALWAYS PLACED ON THE TERMINAL STRIPS IN THE SAME ORDER.

RP2 PIN OUT:
PIN 1 - WHITE WIRE - CONTROL COMMON (24VAC OUT)
PIN 2 - RED WIRE - UP
PIN 3 - BLACK WIRE - DOWN TO SHOW
PIN 4 - GREEN WIRE - DOWN TO SERVICE

© COPYRIGHT		SCALE APPROX	SVS INC.
DRAWN BY:	D.B.	5-09	TOUCH SCREEN CONTROLLER WIRING
CHECKED BY:	C.H.	5-09	
DESIGNED BY:	SVS		DRAWING NO. TCWIRE6_220V.DWG
CAGE CODE:	OKPR7	2-89	REVISION: 01 / RELEASE DATE MAY 13, 2009
PHONE:	850-522-4747		