CONNECT THE 24VAC TERMINAL TO THE DOWN TERMINAL AND THE LIFT WILL GO DOWN TO THE OPEN POSITION.

CONNECT THE 24VAC TERMINAL TO THE UP TERMINAL AND THE LIFT WILL RAISE TO THE CLOSED POSITION.

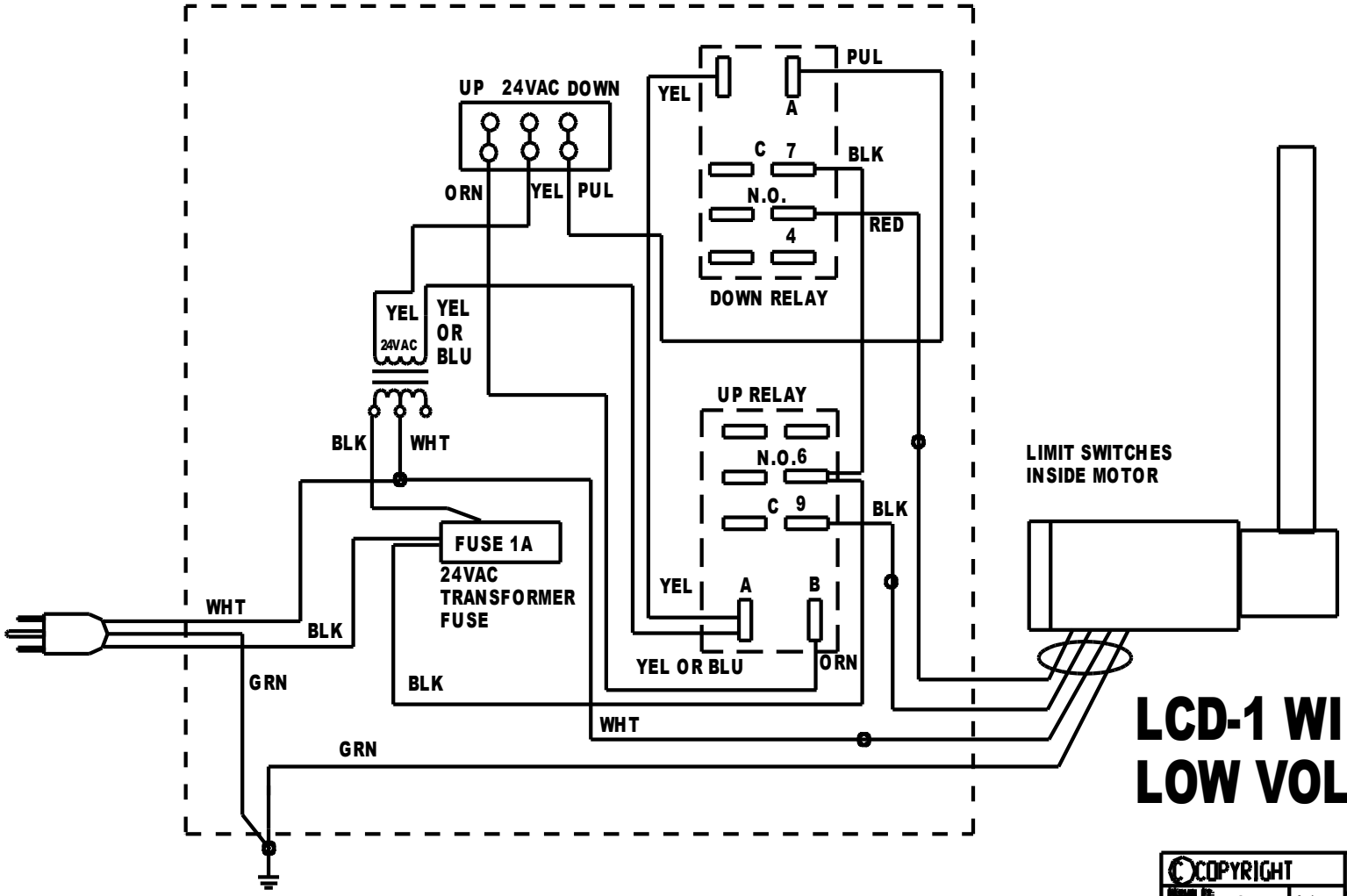

LCD-1 WIRING FOR LOW VOLTAGE

COPYRIGHT		SVS, INC.	
DRAWN BY: C.H.	8-98	PROJECT: LCD PROJECTOR LIFT	
CHECK BY: C.H.	1-99		
DESIGNED BY: SVS,INC.	2-98	DRAWING NO. LCDLV	DESCRIPTION LOW VOLTAGE
CAD CODE: DOPE7	2-99		
PHONE 850-522-4747		REVISION 3	RELEASE DATE 1-01 / SCALE 200